THIS DRAWING UNPUBLISHED.	RELEASED FOR PUBUCATION

LOC	DIST
—	—

REVISIONS

P	LTR		DATE	DWN	APVD
	—	—	—	—	—

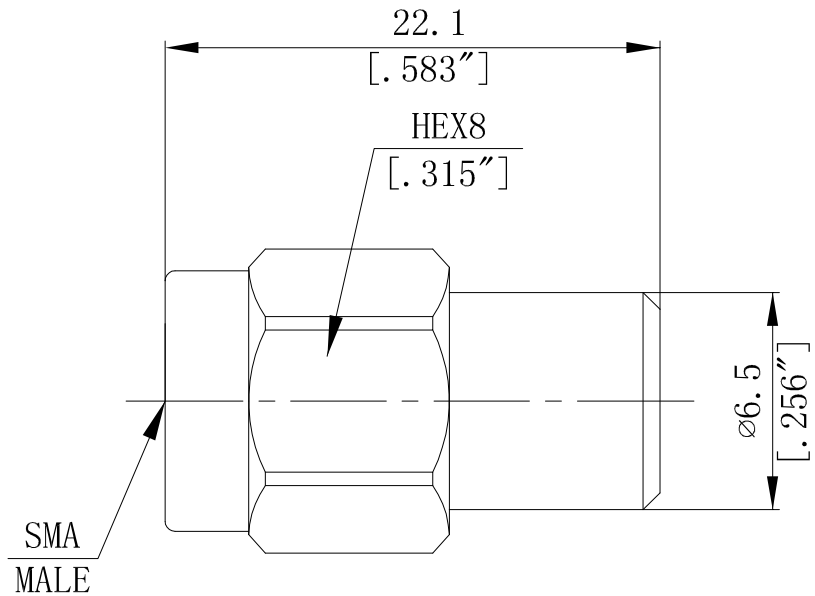

NOTES:

1.ELECTRICAL:

- 1.1 IMPEDANCE: 50Ω
- 1.2 INSULATION RESISTANCE:5000MΩ MIN
- 1.3 FREQUENCY RANGE: DC~6GHz
- 1.4 DIELECTRIC WITHSTANDING VOLTAGE: 1000V MAX AT SEA LEVEL
- 1.5 VSWR≤1.15:1@6GHz
- 1.6 POWER:0.5W

2.ENVIRONMENTAL:

- 2.1 TEMPERATURE RANGE: −55° to +165°

3.MATERIAL AND FINISH:

- 3.1 BODY: BRASS, GOLD PLATING
- 3.2 NUT: BRASS, GOLD PLATING
- 3.3 CENTER CONTACT: BERYLLIUM COPPER, GOLD PLATING
- 3.4 DIELECTRIC: PTFE, N/A

THIS DRAWING IS A CONTROLLED DOCUMENT.

DIMENSIONS MM

TOLERANCES UNLESS OTHERWISE SPECIFIED:
0 PLC ±0.25
1 PLC ±0.15
2 PLC ±0.12
3 PLC ±-
4 PLC ±-
ANGLES ±1°

MATERIAL: SEE TABLE

FINISH: SEE TABLE

DWN DGJ 25/07/2017
CHK
APVD
PRODUCT SPEC —
APPLICATION SPEC —
WEIGHT —

CUSTOMER DRAWING

Jiangsu ZDecl Microwave Technology Co., Ltd.

NAME: SMA Male Load

SIZE	CAGE CODE	DRAWING NO
A4	00779	SMAJL-06-0.5W

SCALE 2:1 | SHEET 1 OF 1 | RVE 1